216045

SEL1/0CB

Classic electric pass-through Salamander (SEL)

- Classic SEL1/0CB pass-through electric salamander.
- 1 cooking zone 37.5x40 cm.
- A salamander is a versatile appliance used for cooking au gratin, keeping ready-to-serve dishes warm, finishing baked dishes like lasagna and flans, as well as grilling and finishing meats such as hamburgers, steaks, sausages, and cutlets.
- Stainless steel structure open on 3 sides.
- Heating through Incoloy armoured heating elements on the upper plate.
- Temperature control via energy regulator.
- Removable chrome-plated steel cooking grid and stainless steel grease collection container with heat-resistant handle.
- Height-adjustable cooking grid (6 levels) with a rack system.
- Rubberised plastic feet.
- Wall installation brackets (optional)

TECNOINOX Srl reserves the right to make changes at any time without prior notice.
tecnoinox.it

TECHNICAL DATA

TOTAL POWER	2 kW	ELECTRIC POWER	2 kW
FREQUENCY	50/60 Hz	VOLTAGE	220-240 ~ V
HEATING PLATES	n° 1	COOKING SURFACE	37,5X40 cm
HEATING ZONES	n° 1	IPX RATING	3
WIDTH	55 cm	DEPTH	40 cm
HEIGHT	35 cm	PACKAGE WIDTH	51 cm
PACKAGE DEPTH	61 cm	PACKAGE HEIGHT	61 cm
NET WEIGHT	37 kg	GROSS WEIGHT	43,4 kg
VOLUME	0,18 m³		

ACCESSORIES

9012	PAIR OF WALL BRACKETS FOR SALAMANDERS SEL1

TECNOINOX Srl reserves the right to make changes at any time without prior notice.
tecnoinox.it

INSTALLATION DIAGRAMS

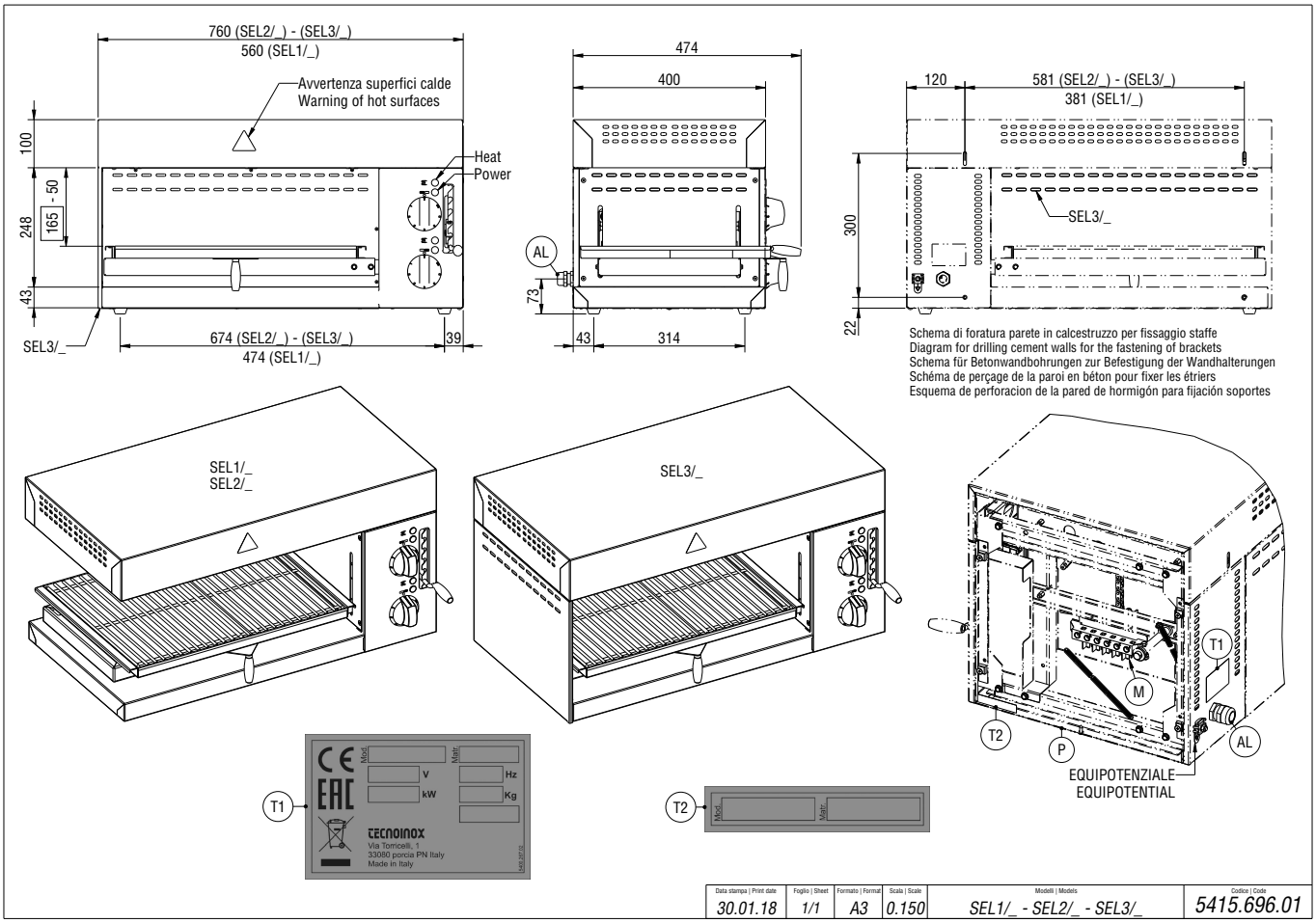

TECNOINOX Srl reserves the right to make changes at any time without prior notice.
tecnoinox.it