216023

SEF2/0

Classic electric Salamander closed on 3 sides (SEF)

- Classic SEF2/0 electric salamander closed on 3 sides.
- 2 independent cooking zones for an overall surface of 62.5x38 cm.
- A salamander is a versatile appliance used for cooking au gratin, keeping ready-to-serve dishes warm, finishing baked dishes like lasagna and flans, as well as grilling and finishing meats such as hamburgers, steaks, sausages, and cutlets.
- Stainless steel structure closed on 3 sides for greater energy savings and faster cooking times.
- Easily removable rear panel to make the salamander accessible from 2 sides, like a pass-through model.
- Heating through Incoloy armoured heating elements on the upper plate.
- Temperature control via energy regulator.
- Removable chrome-plated steel cooking grid and stainless steel grease collection container with heat-resistant handle.
- Height-adjustable (3 levels) cooking grid.
- Rubberised plastic feet.
- Wall installation brackets (optional)

TECNOINOX Srl reserves the right to make changes at any time without prior notice.
tecnoinox.it

TECHNICAL DATA

TOTAL POWER	4 kW	ELECTRIC POWER	4 kW
FREQUENCY	50/60 Hz	VOLTAGE	400 2N ~ V
GUIDES	n° 3	HEATING PLATES	n° 1
COOKING SURFACE	62,5X38 cm	HEATING ZONES	n° 2
IPX RATING	3	WIDTH	79 cm
DEPTH	40 cm	HEIGHT	39 cm
PACKAGE WIDTH	85 cm	PACKAGE DEPTH	49 cm
PACKAGE HEIGHT	46 cm	NET WEIGHT	21 kg
GROSS WEIGHT	24 kg	VOLUME	0,19 m³

ACCESSORIES

9008	PAIR OF WALL BRACKETS FOR SALAMANDERS QSEF-SEF

TECNOINOX Srl reserves the right to make changes at any time without prior notice.
tecnoinox.it

INSTALLATION DIAGRAMS

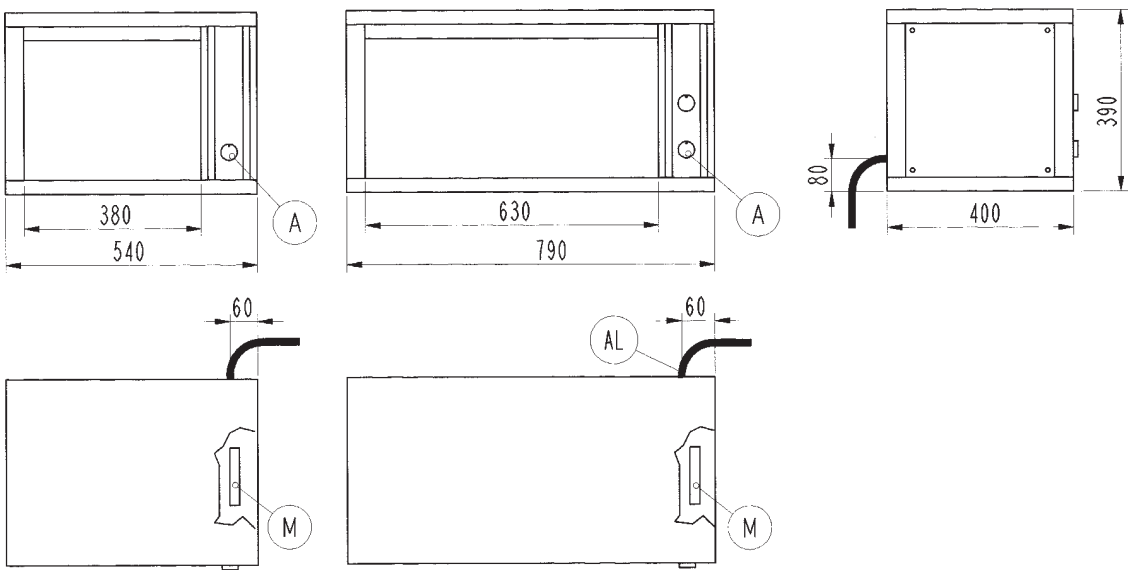

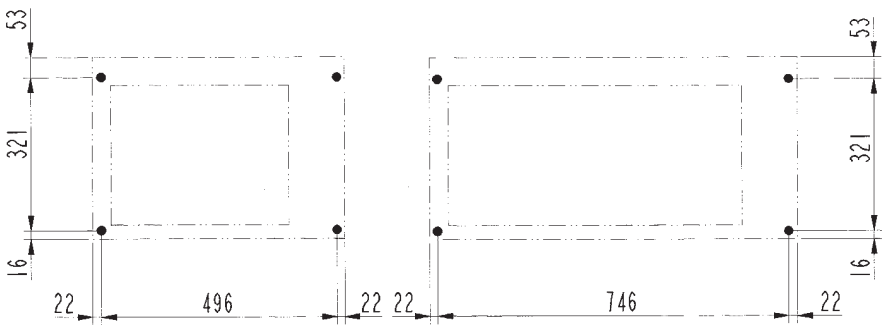

Schema di foratura parete in calcestruzzo per fissaggio staffe
Schema für Betonwandbohrungen zur Befestigung der Wandhalterungen
Diagram for drilling cement walls for the fastening of brackets
Schéma de perçage de la paroi en béton pour fixer les étriers
Esquema de perforación de la pared de hormigón para fijación soportes

AI = Entrata cavo elettrico | Power supply cable inlet | Netzkabeleingang | Вход электропровода | Entrée câble électrique | Entrada cable eléctrico.

Fig.1 | Abb.1 | рис.1 - 5415.698.00

TECNOINOX Srl reserves the right to make changes at any time without prior notice.
tecnoinox.it