136032

DFR70ES0

Double tank 8+8l electric fryer , in-tank tilting heating elements (Drop-in version) - lids and baskets included

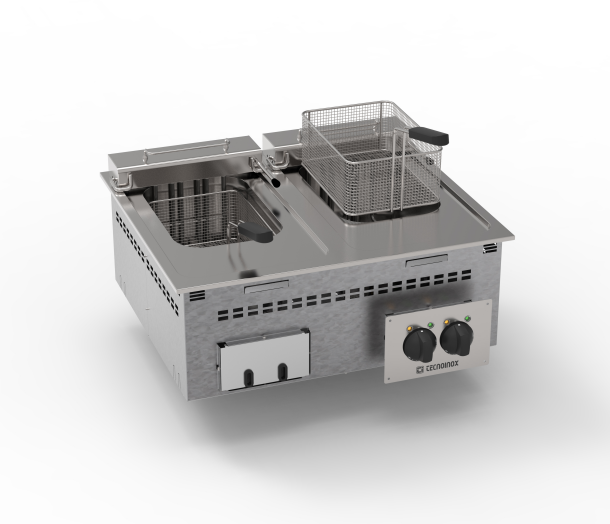

- Electric drop-in fryer with 2 x 8+8 l independent tanks (70 x 60 x 33 cm).
- Drop-ins are appliances inserted into worktops of different non-flammable materials. Modules can rest on the worktop or be installed flush the worktop.
- Power: 2 x 7.5 kW.
- AISI 304 deep drawn tank with rounded corners seamlessly welded to an AISI 304 stainless steel deep drawn worktop, Scotch Brite finish.
- Rounded internal profile of the deep drawn tank to facilitate cleaning, complying with hygiene standards.
- Large front basin for oil and foam expansion.
- Heating through AISI 304 stainless steel tilting armoured heating elements for easy cleaning of the tank.
- Basket support fixed to the tilting device.
- Draining on the tank bottom.
- Basket and lid included.
- Stainless steel control panel.
- Operating thermostat ranging between 100°C and 190°C below oil smoke point.
- Bulb thermostats immersed in oil are more efficient in sensing the temperature inside the tank, promptly adjusting the oil to the desired temperature, minimising smoke points, and prolonging the oil life.
- A safety thermostat triggers in case of abnormal operation.
- Green light indicating voltage presence.
- Orange light indicating that the heating elements are heating up.

TECNOINOX Srl reserves the right to make changes at any time without prior notice.
tecnoinox.it

TECHNICAL DATA

TOTAL POWER	15 kW	ELECTRIC POWER	15 kW
FREQUENCY	50/60 Hz	VOLTAGE	400 3N ~ V
TEMPERATURE RANGE	100÷190 °C	TANK CAPACITY	8LT+8LT
TANK DIMENSIONS	22,5X34X22,5 cm	HEATING	HEATING ELEMENTS IN THE TANK
TANK TYPE	AISI 304	TANKS	n° 2
WIDTH	70 cm	DEPTH	60 cm
HEIGHT	33 cm	PACKAGE WIDTH	76 cm
PACKAGE DEPTH	71 cm	PACKAGE HEIGHT	53 cm
NET WEIGHT	23,9 kg	GROSS WEIGHT	31,4 kg
VOLUME	0,29 m³		

ACCESSORIES

120575	EXTRA FRYER BASKET (8L) - DIM. CM (21X26.5X10.5H)
120690	2 EXTRA FRYER BASKETS (8L) - DIM. CM (10.5X26.5X10.5H)

TECNOINOX Srl reserves the right to make changes at any time without prior notice.
tecnoinox.it

INSTALLATION DIAGRAMS

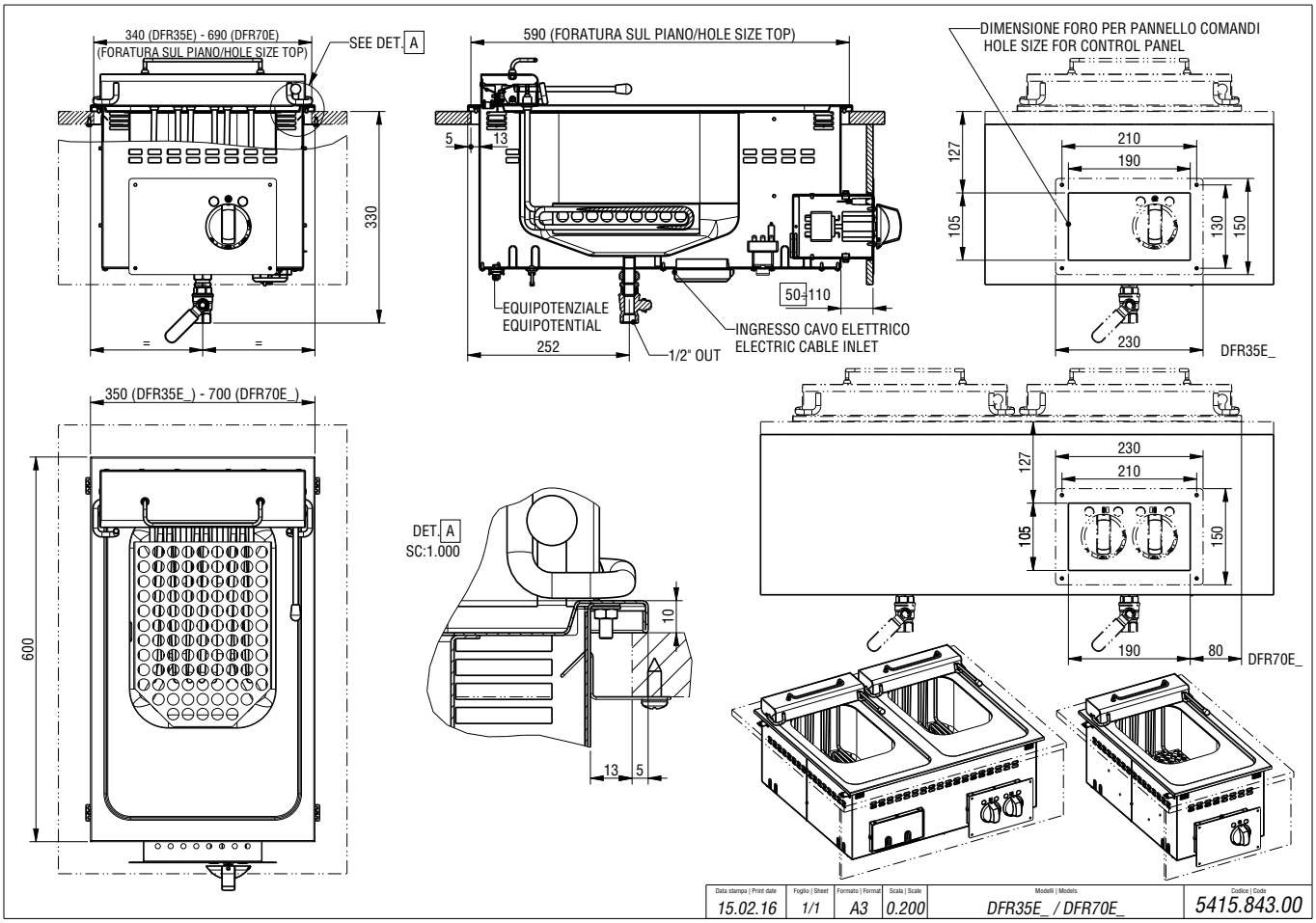

TECNOINOX Srl reserves the right to make changes at any time without prior notice.
tecnoinox.it

Standard installation

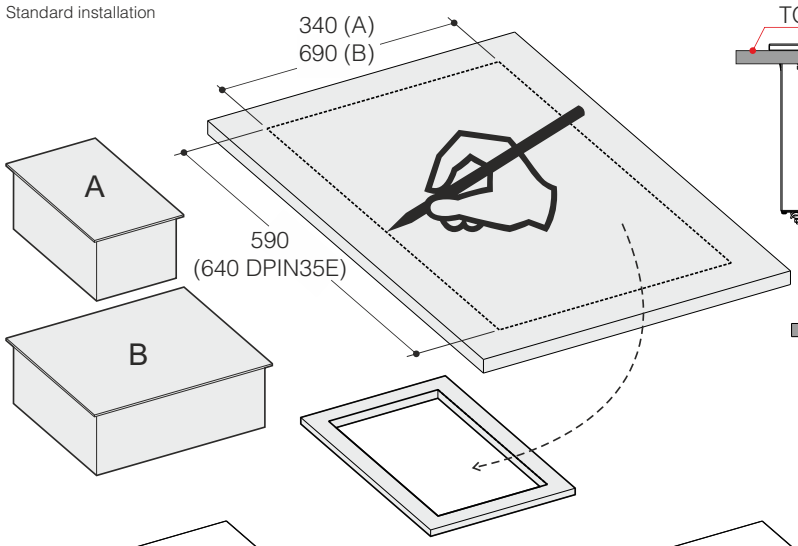

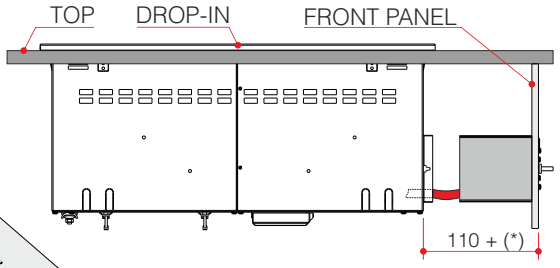

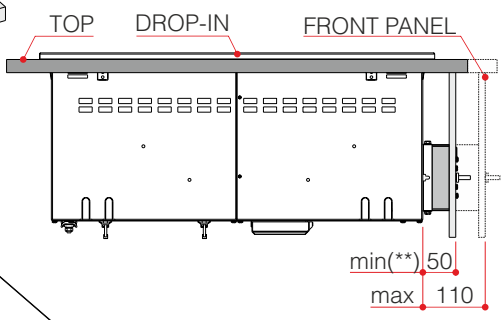

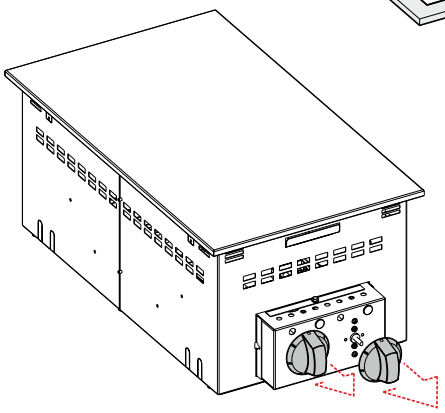

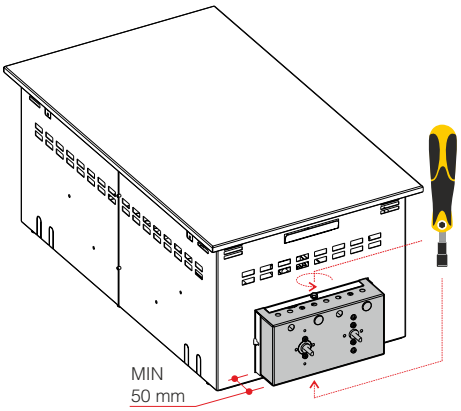

(*)
dipende dal modello
variable from models

(**) 110 mm
per modelli DBM_
for DBM_ models

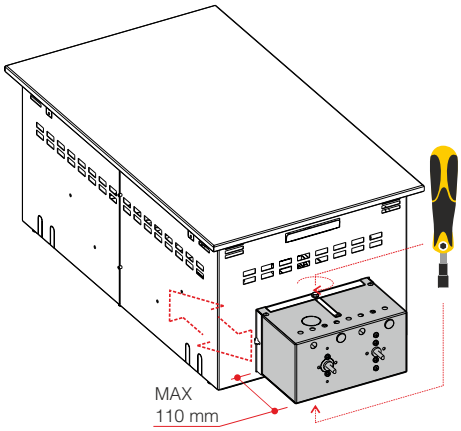

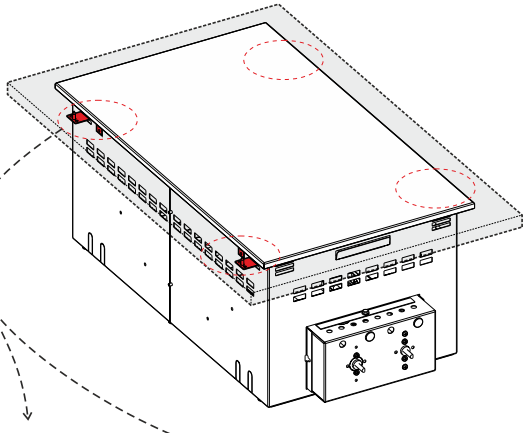

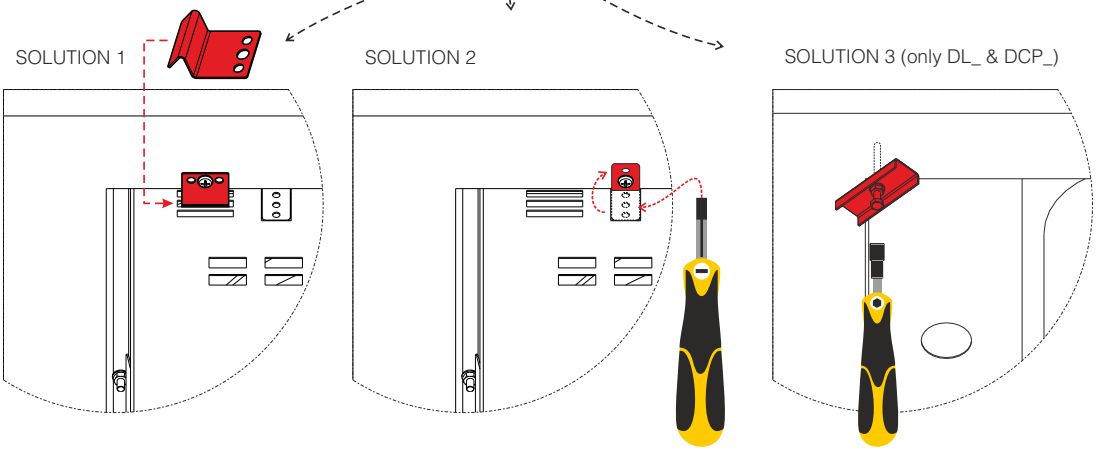

5415.912.00

Fixing Type 1

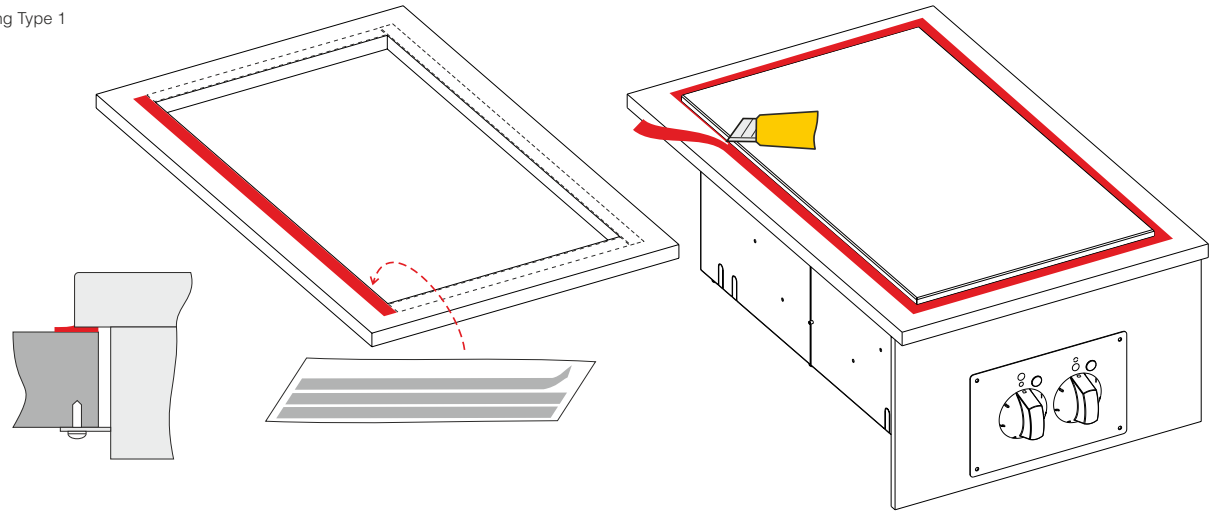

Fixing Type 2 & 3

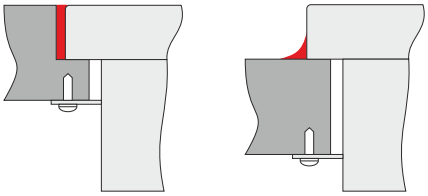

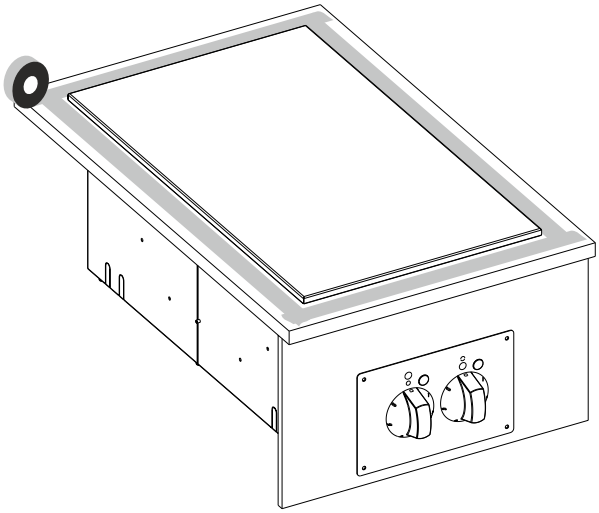

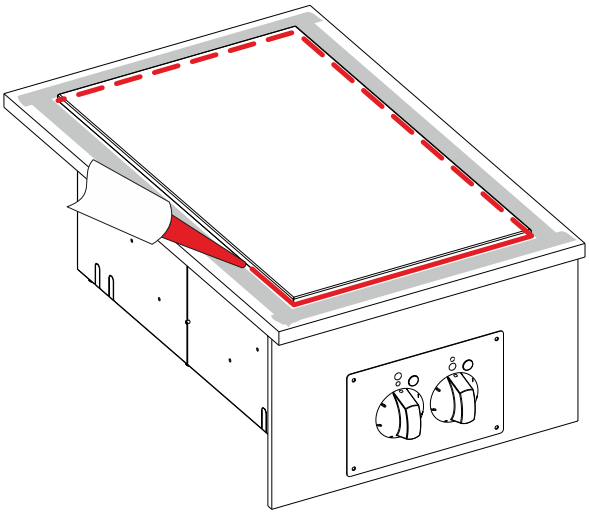

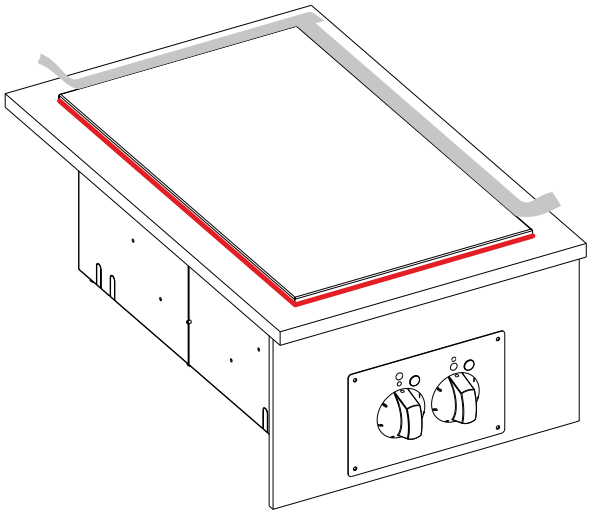

Side installation

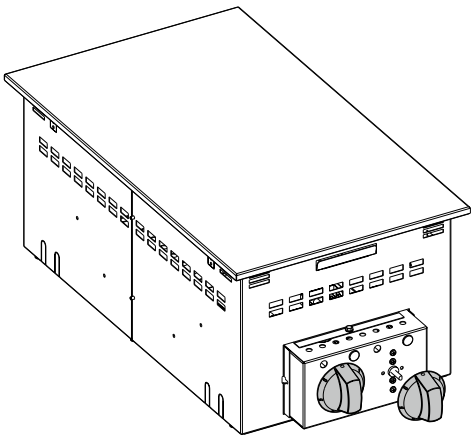

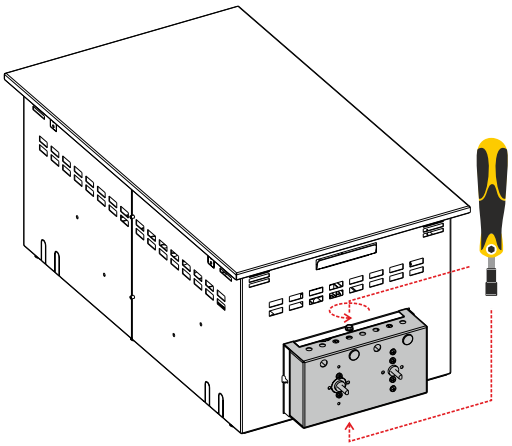

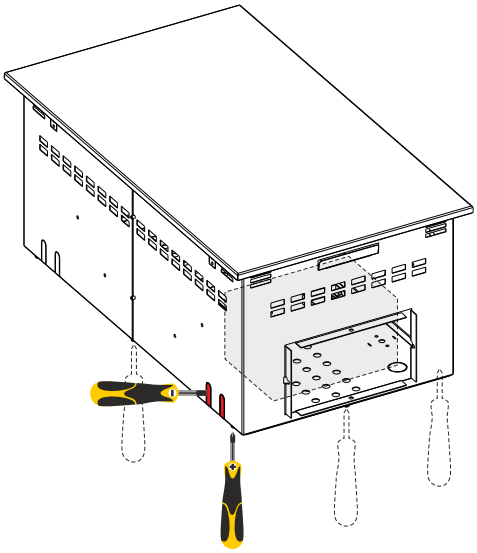

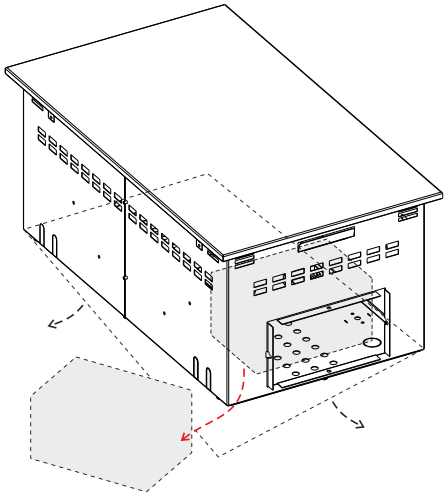

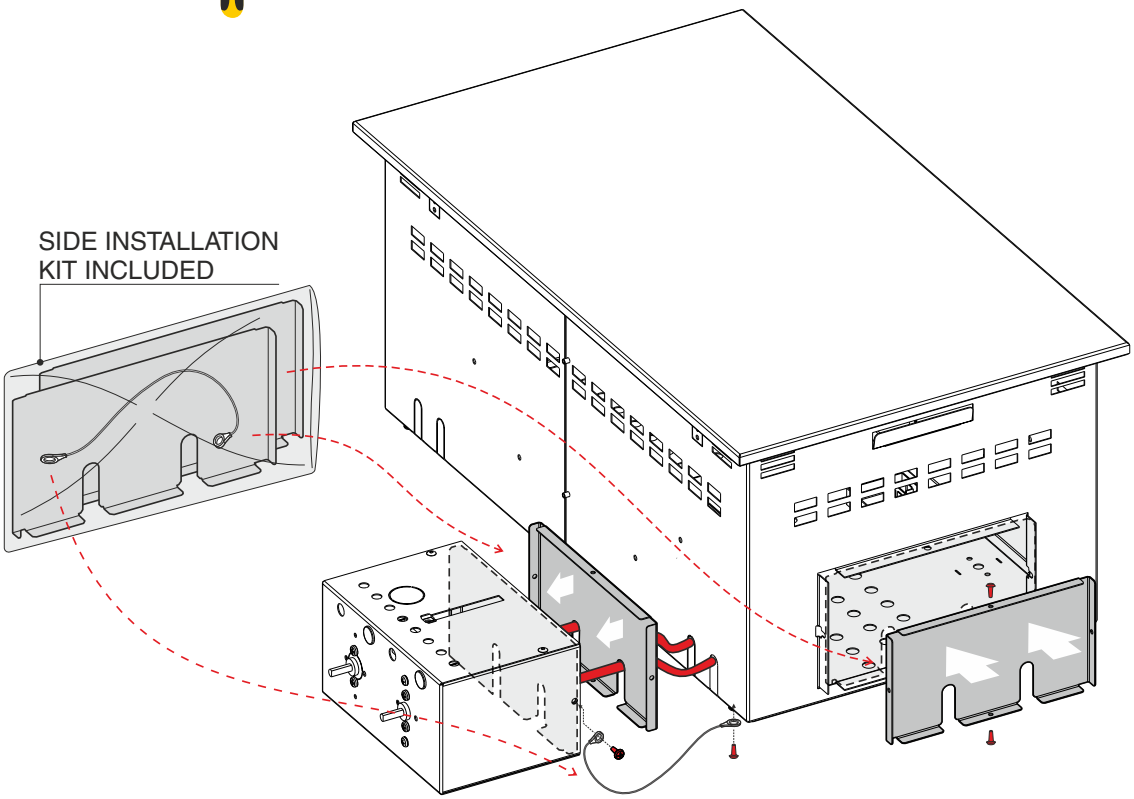

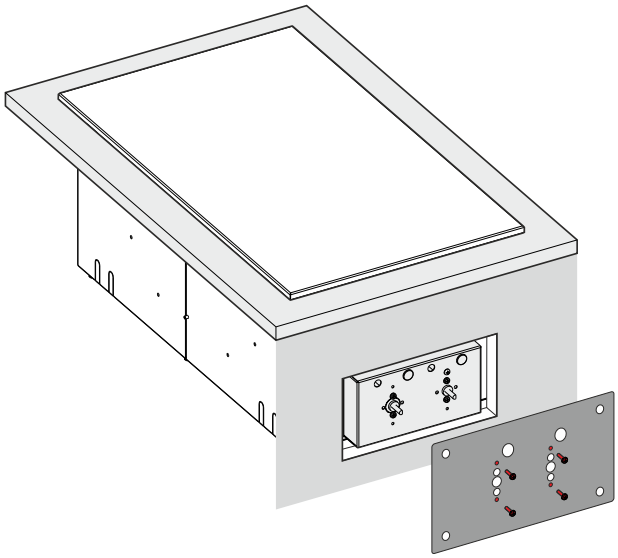

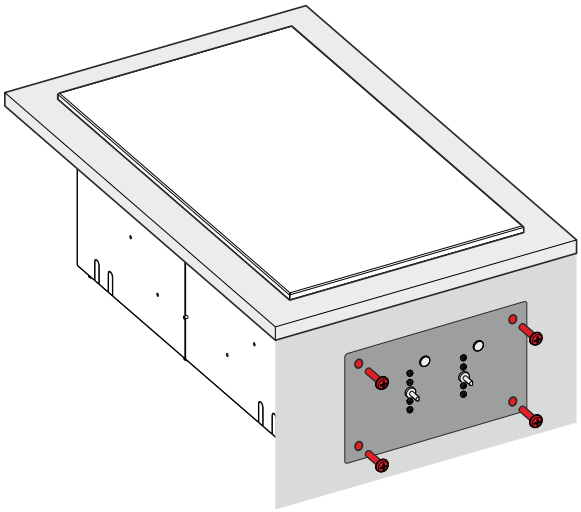

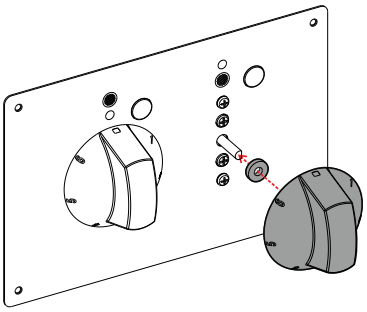

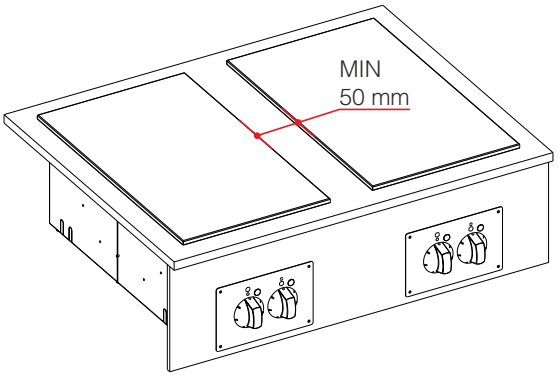
MIN
50 mm

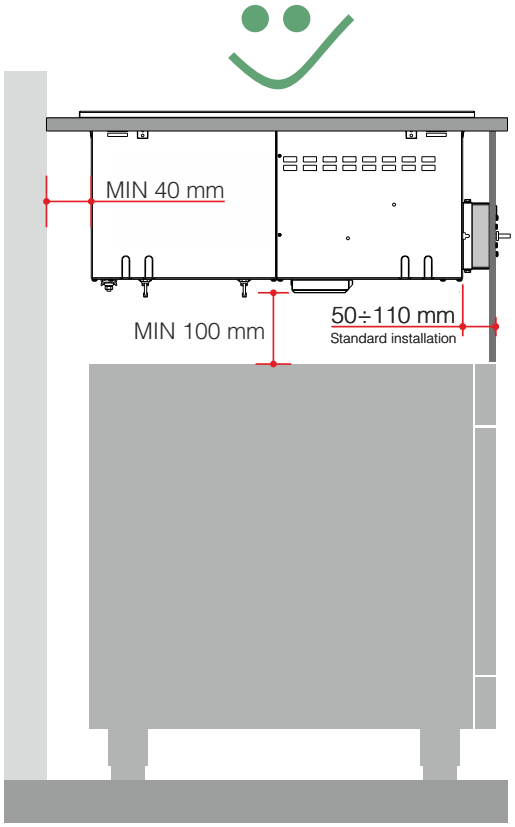
MIN 40 mm
MIN 100 mm
50÷110 mm
Standard installation

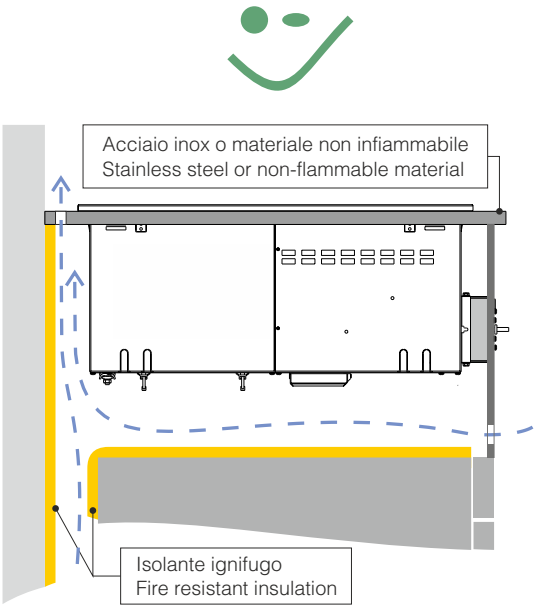
Acciaio inox o materiale non infiammabile
Stainless steel or non-flammable material
Isolante ignifugo
Fire resistant insulation