# 136012

## DFTR35E0

## Electric griddle with ribbed plate (Drop-in version)

- Electric drop-in griddle (35 x 60 x 26.6 cm) with a ribbed steel cooking plate.
- Drop-ins are appliances inserted into worktops of different non-flammable materials. Modules can rest on the worktop or be installed flush the worktop.
- Horizontal cooking plate (12 cm thick) sealed to the AISI 304 worktop.
- Power: 3.9 kW.
- Stainless steel control panel.
- Appliances intended for direct cooking.
- Heating through stainless steel armoured heating elements.
- Operating thermostatic valve with temperature control ranging between 70°C and 310°C.
- Grease and liquid collection grooving with a cap with bottom drain.
- Removable splashback on 3 sides integrated into the worktop.
- Fitted with a safety thermostat that triggers in case of abnormal operation.


TECNOINOX Srl reserves the right to make changes at any time without prior notice.
tecnoinox.it

## TECHNICAL DATA

| | | | |
|---|---|---|---|
| TOTAL POWER | 3,9 kW | ELECTRIC POWER | 3,9 kW |
| FREQUENCY | 50/60 Hz | VOLTAGE | 400 3N ~ V |
| TEMPERATURE RANGE | 50÷320 °C | COOKING SURFACE | 34,6X56,4 cm |
| PLATE TYPE | RIBBED | HEATING ZONES | n° 1 |
| WIDTH | 35 cm | DEPTH | 60 cm |
| HEIGHT | 26,6 cm | PACKAGE WIDTH | 71 cm |
| PACKAGE DEPTH | 41 cm | PACKAGE HEIGHT | 53 cm |
| NET WEIGHT | 26 kg | GROSS WEIGHT | 32,2 kg |
| VOLUME | 0,15 m³ | | |

## ACCESSORIES

| | |
|---|---|
| **120595** | GRIDDLE-CLEANING SCRAPER |
| **120597** | SCRAPER - REPLACEMENT BLADE KIT (10 PIECES) |
| **120598** | SCRAPER - REPLACEMENT BLADE KIT FOR RIBBED PLATE (10 PIECES) |


TECNOINOX Srl reserves the right to make changes at any time without prior notice.
**tecnoinox.it**

## INSTALLATION DIAGRAMS

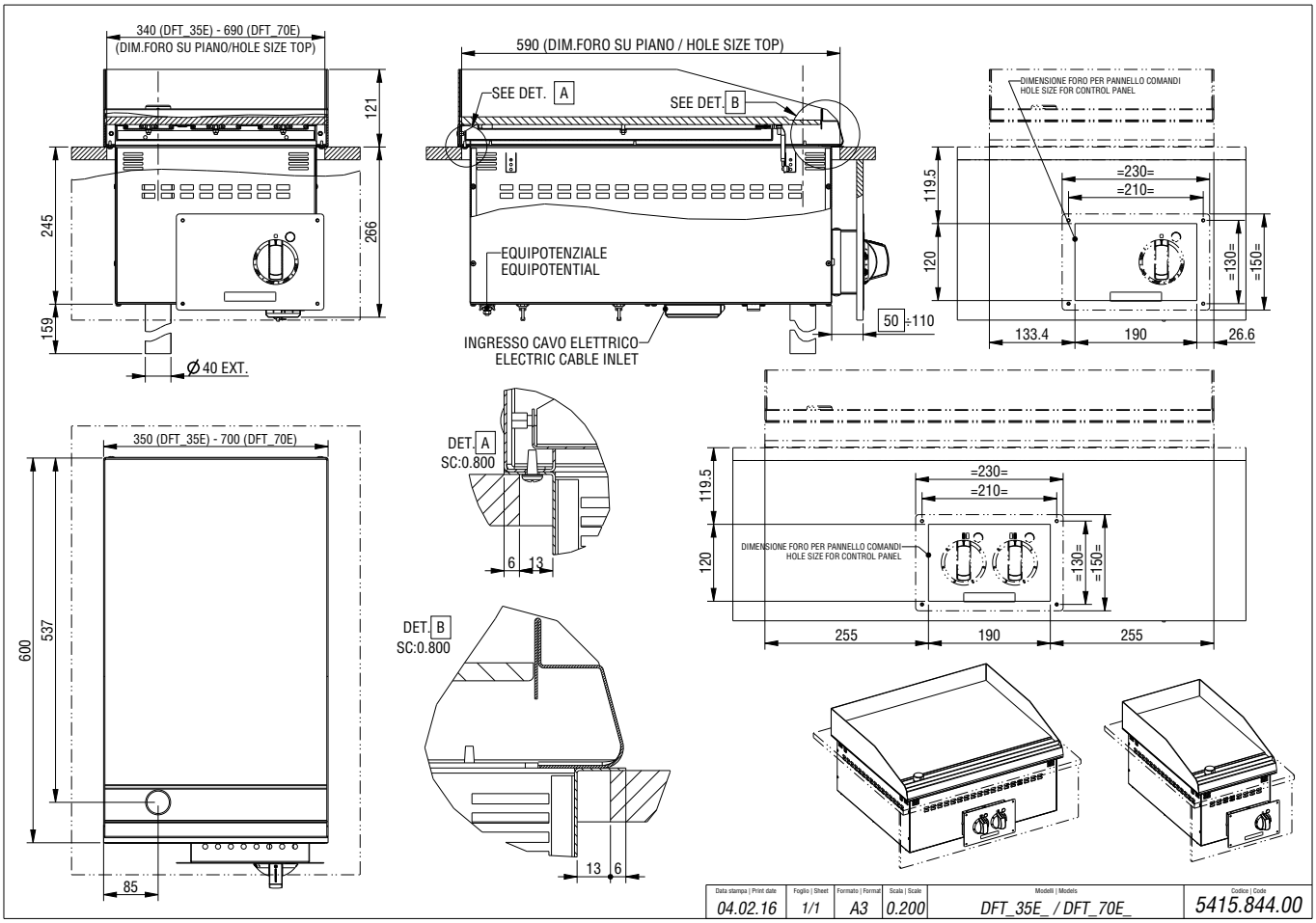



TECNOINOX Srl reserves the right to make changes at any time without prior notice.
tecnoinox.it