136006

DPCC35E0

Glass ceramic electric boiling top with 2 heating zones (Drop-in version)

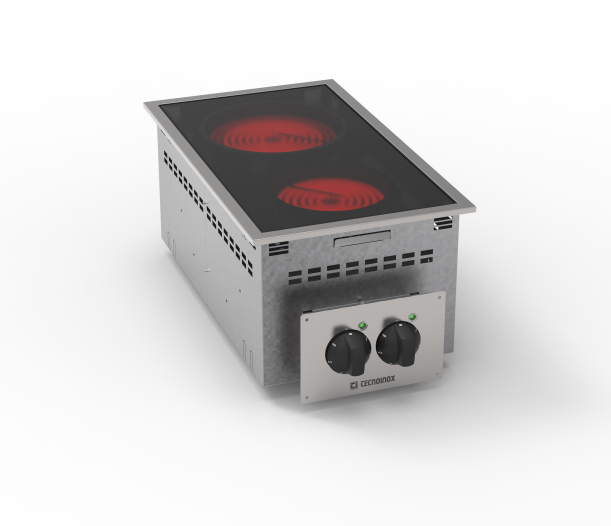

- Electric glass ceramic drop-in (35 x 60 x 26.6 cm) with 2 independent cooking zones.
- Drop-ins are appliances inserted into worktops of different non-flammable materials. Modules can rest on the worktop or be installed flush the worktop.
- Glass ceramic cook top (6 mm thick) hermetically sealed to the top for maximum hygiene and ease of cleaning.
- Ultra-rapid infrared heating elements with a power of 1.8 kW in a single circuit and 2.5 kW in a dual circuit for each independent area.
- Energy regulator 0-6-infinite.
- Temperature limiter to prevent overheating.
- Lights warning when the heating areas are active.
- Warning lamps on the glass to enhance operator safety by signalling residual heat.
- Stainless steel control panel.

TECNOINOX Srl reserves the right to make changes at any time without prior notice.
tecnoinox.it

TECHNICAL DATA

TOTAL POWER	4,3 kW	ELECTRIC POWER	4,3 kW
FREQUENCY	50/60 Hz	VOLTAGE	400 2N ~ V
BOILING TOP POWER	4,3 kW	COOKING ZONE POWER	1X1,8 + 1X2,5 n°- kW
2-ZONE HEATING ELEMENTS	n° 1	NUMBER OF COOKING ZONES	n° 2
HEATING ZONES	n° 2	WIDTH	35 cm
DEPTH	60 cm	HEIGHT	26,6 cm
PACKAGE WIDTH	71 cm	PACKAGE DEPTH	41 cm
PACKAGE HEIGHT	53 cm	NET WEIGHT	11 kg
GROSS WEIGHT	15 kg	VOLUME	0,15 m³

TECNOINOX Srl reserves the right to make changes at any time without prior notice.
tecnoinox.it

INSTALLATION DIAGRAMS

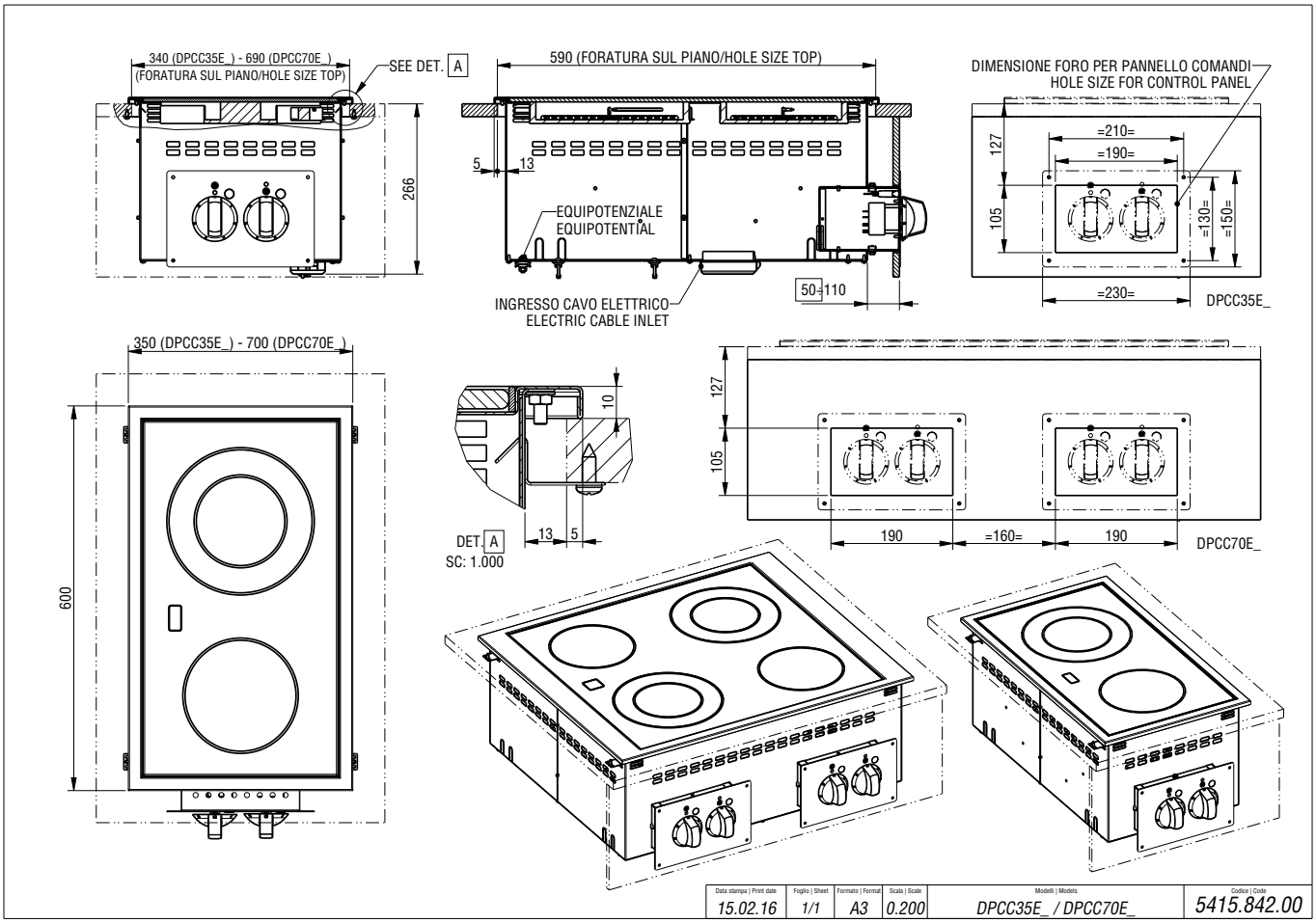

TECNOINOX Srl reserves the right to make changes at any time without prior notice.
tecnoinox.it

Standard installation

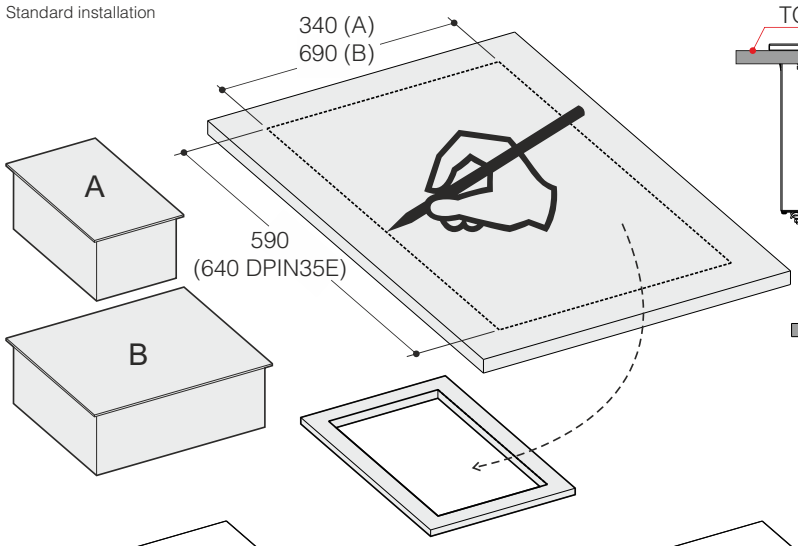

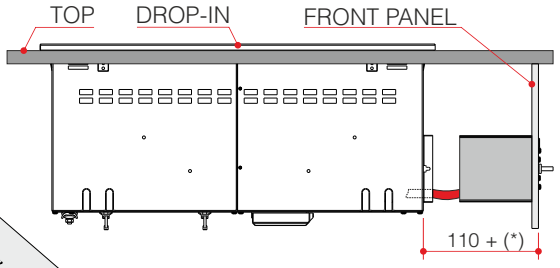

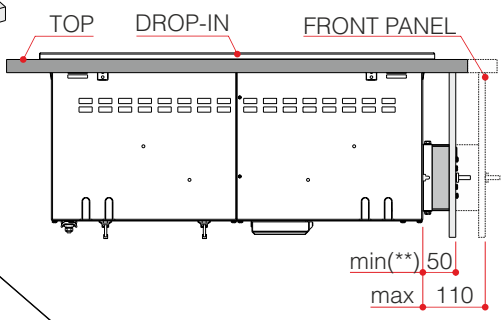

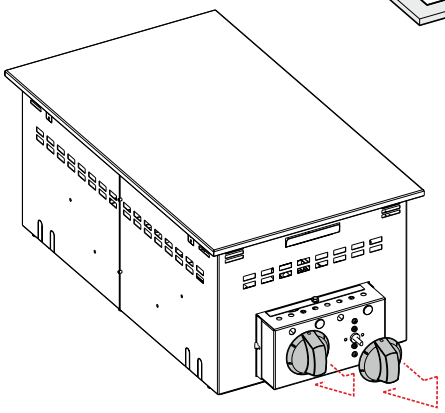

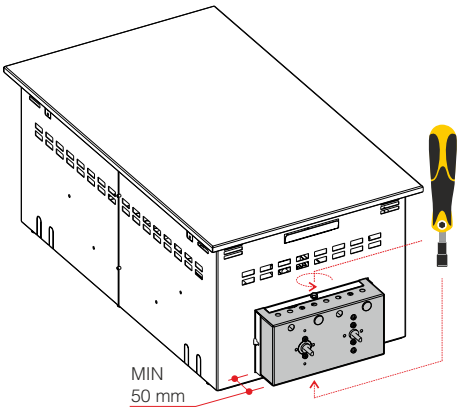

(*)
dipende dal modello
variable from models

(**) 110 mm
per modelli DBM_
for DBM_ models

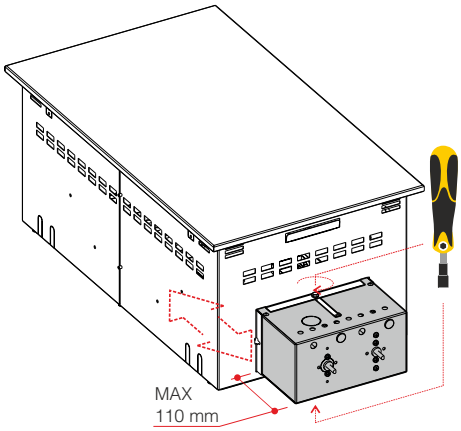

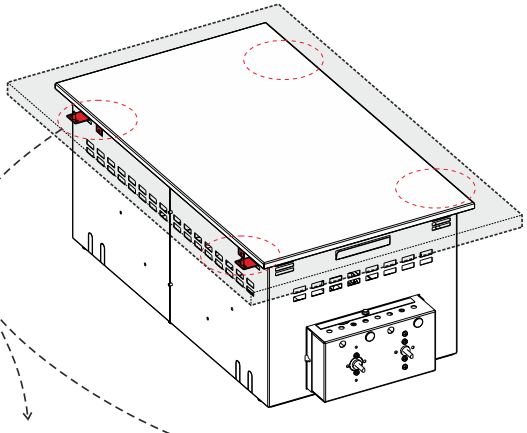

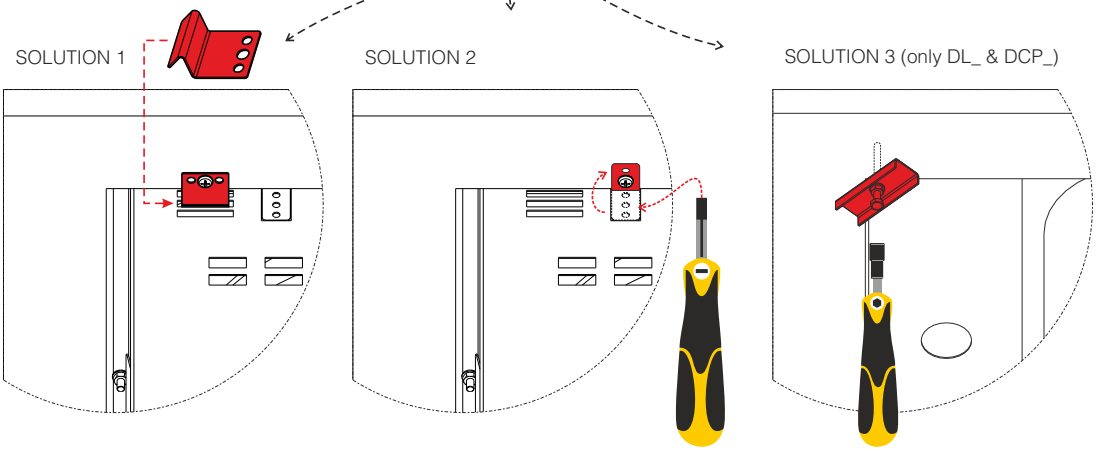

5415.912.00

Fixing Type 1

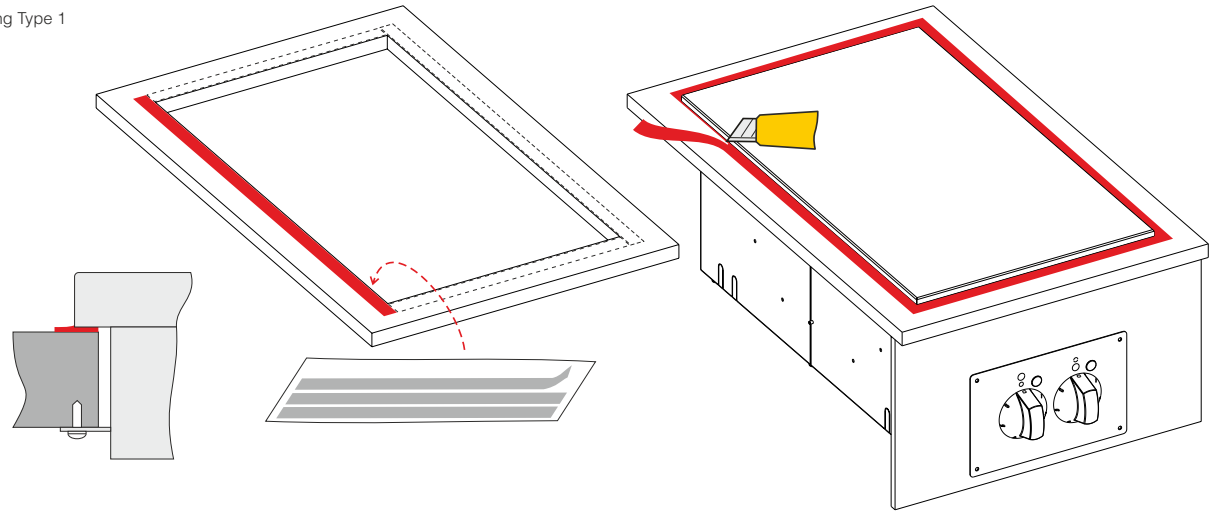

Fixing Type 2 & 3

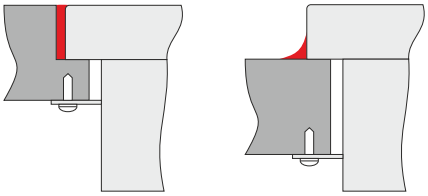

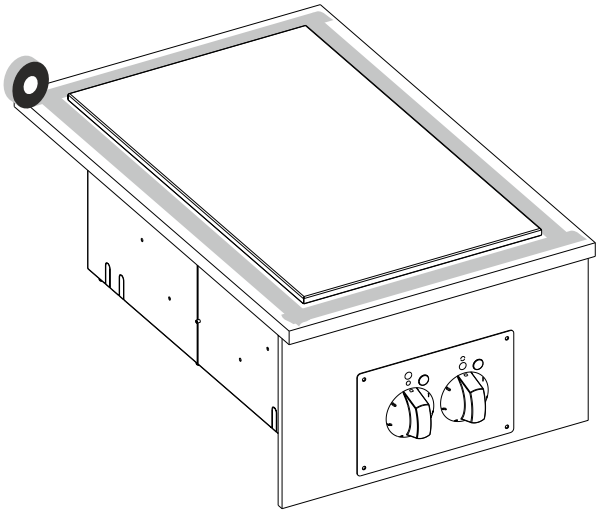

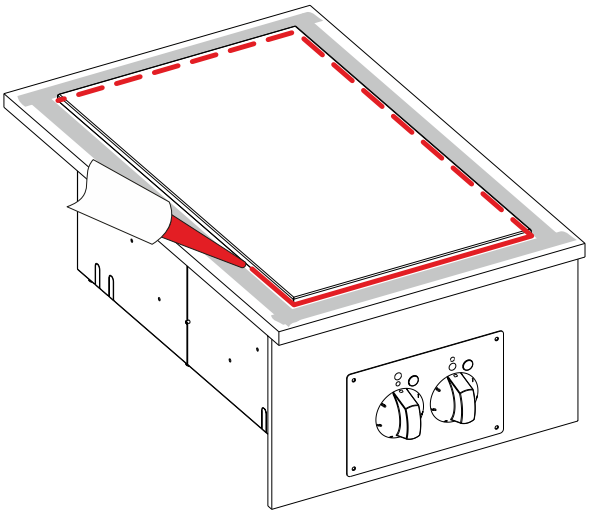

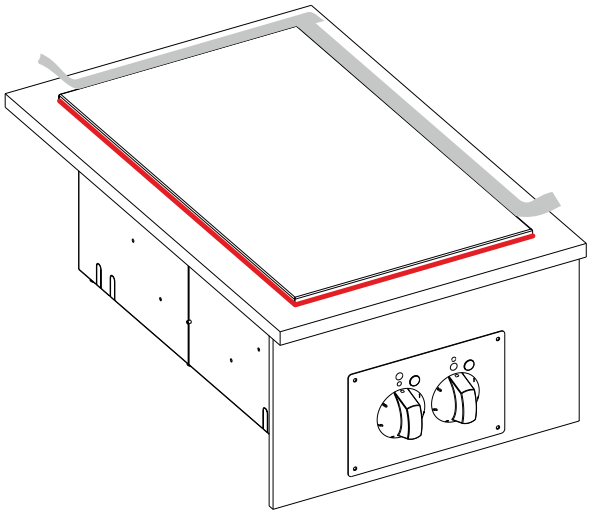

Side installation

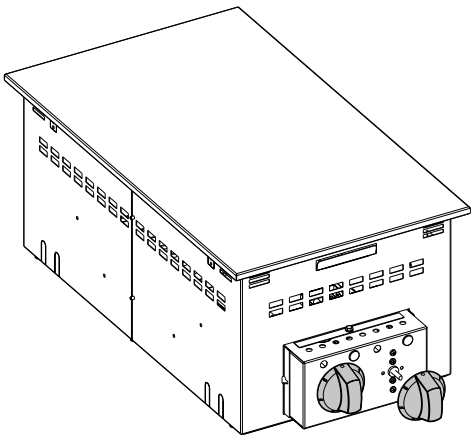

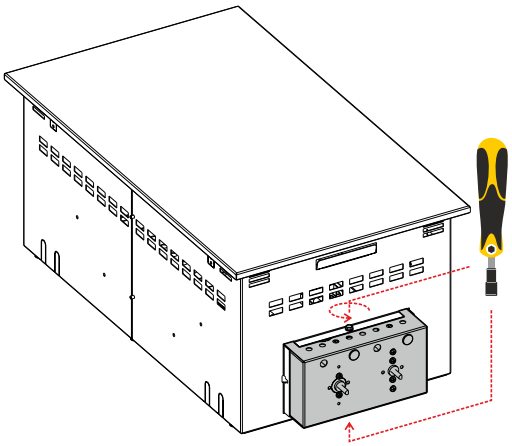

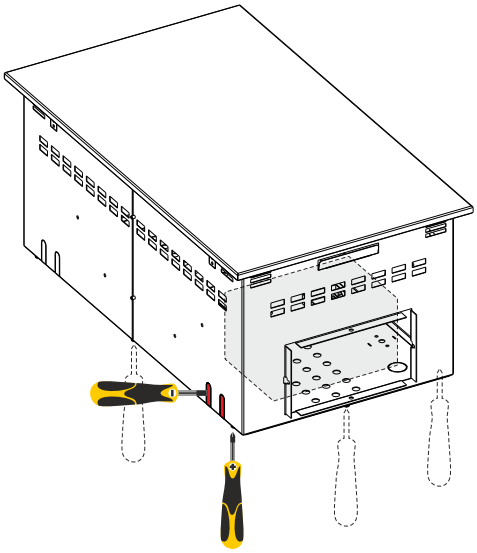

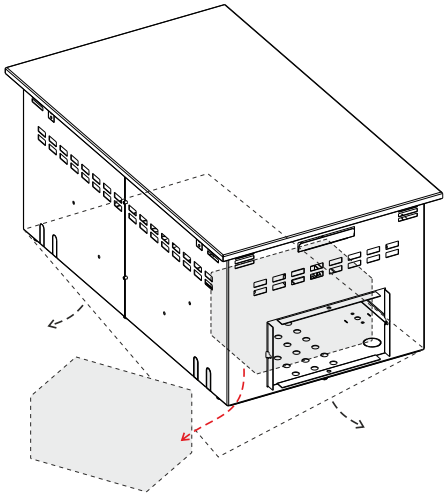

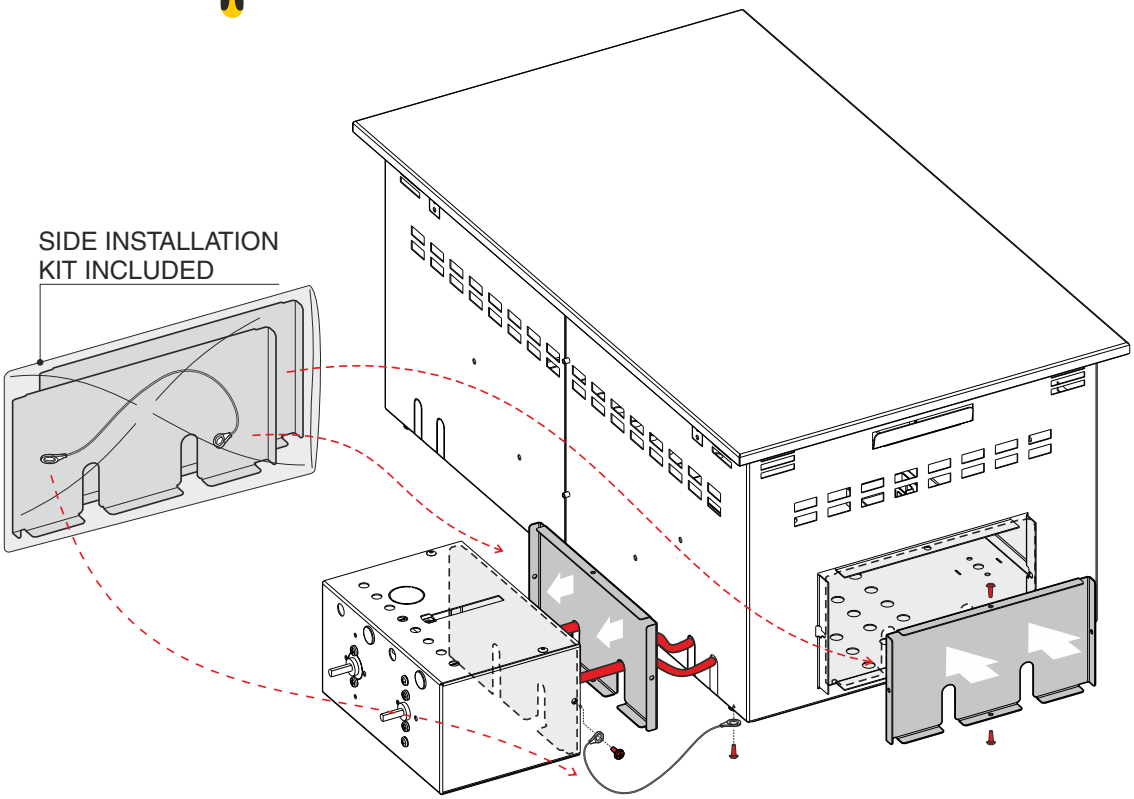

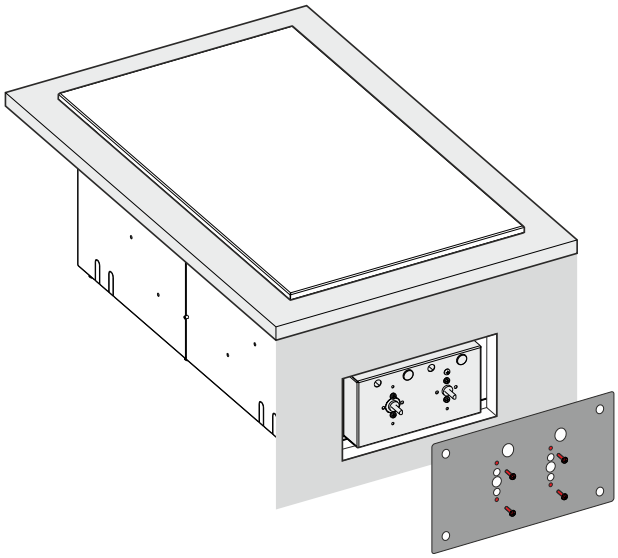

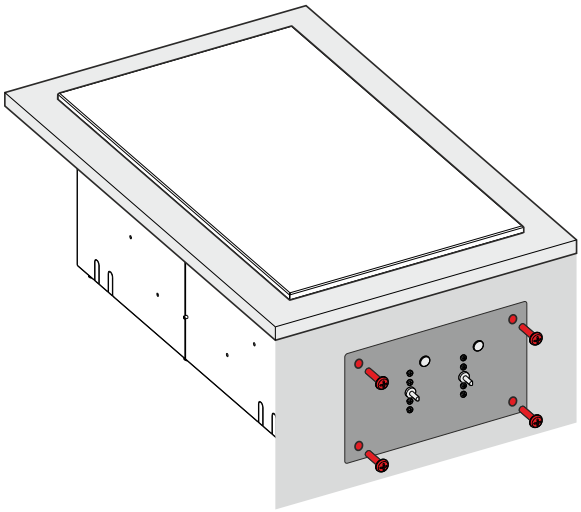

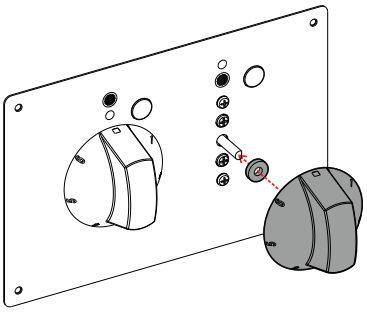

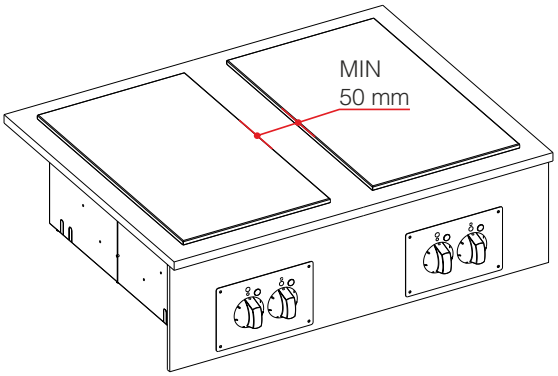
MIN
50 mm

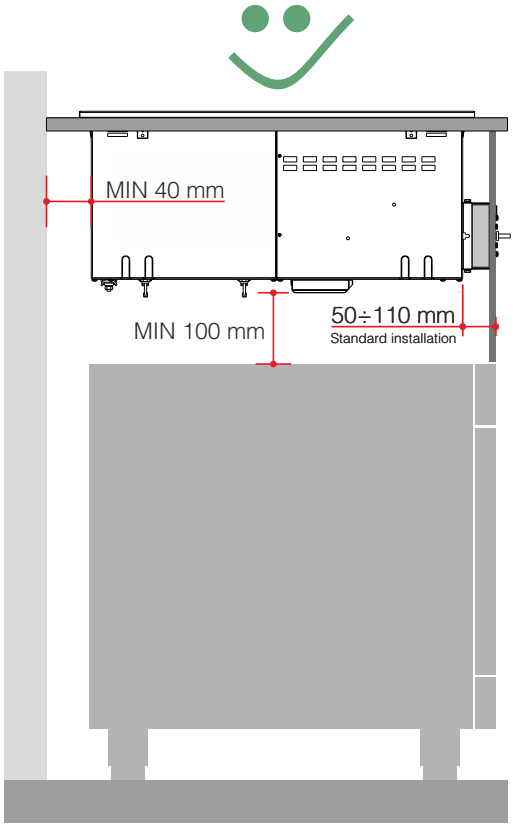
MIN 40 mm
MIN 100 mm
50÷110 mm
Standard installation

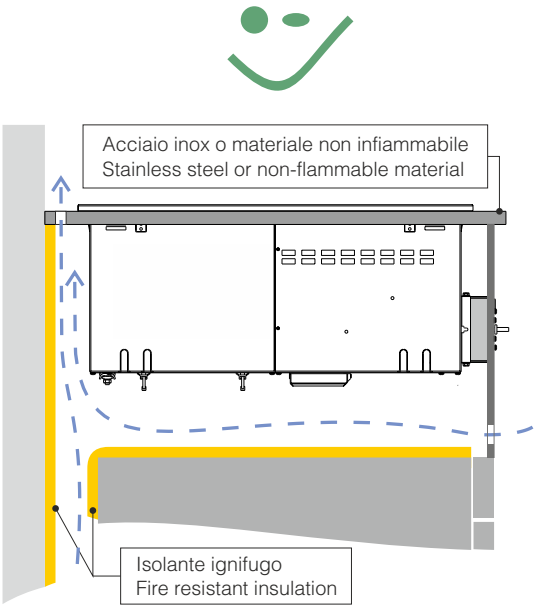
Acciaio inox o materiale non infiammabile
Stainless steel or non-flammable material
Isolante ignifugo
Fire resistant insulation