126030

FTC70E/0

Electric griddle with chrome-plated smooth plate (top version)

- Gas griddle (70 cm top version) with smooth mirror-polished brushed chrome-plated plate recommended for cooking delicate products.
- Horizontal cooking plate (12 cm thick), 2 independent work areas.
- The non-stick plate ensures quick and effortless cleaning, prevents oxidation, and eliminates any flavour transfer.
- Scraper included.
- Chrome-plated griddles comply with EU Regulation 1935/2004 concerning food contact materials and articles which are intended to come into contact with food.
- Stainless steel control panel and side panels.
- Module coupling system with external side joints.
- Appliances intended for direct cooking.
- Cooking plate hermetically sealed to the worktop.
- Heating through stainless steel armoured heating elements.
- Operating thermostatic valve with temperature control ranging between 70°C and 310°C.
- Grooving with a cap and removable drawer for collecting grease and liquids.
- Removable splashback on 3 sides integrated into the worktop.
- Fitted with a safety thermostat that triggers in case of abnormal operation.
- Height-adjustable rubberised plastic feet (15-25 mm).
- Technical compartment to facilitate connection to the electrical network.

TECNOINOX Srl reserves the right to make changes at any time without prior notice.
tecnoinox.it

TECHNICAL DATA

TOTAL POWER	7,8 kW	ELECTRIC POWER	7,8 kW
FREQUENCY	50/60 Hz	VOLTAGE	380-415 3N~ V
TEMPERATURE RANGE	50÷320 °C	COOKING SURFACE	69,6X56,4 cm
PLATE TYPE	CHROME-PLATED - SMOOTH	HEATING ZONES	n° 2
FOOT HEIGHT	25 mm	FOOT ADJUSTMENT	25/35 mm
IPX RATING	4	WIDTH	70 cm
DEPTH	65 cm	HEIGHT	28 cm
PACKAGE WIDTH	76 cm	PACKAGE DEPTH	71 cm
PACKAGE HEIGHT	53 cm	NET WEIGHT	57 kg
GROSS WEIGHT	64,6 kg	VOLUME	0,29 m³

ACCESSORIES

120590	PAIR OF JOINTS FOR GRIDDLES
120595	GRIDDLE-CLEANING SCRAPER
120597	SCRAPER - REPLACEMENT BLADE KIT (10 PIECES)

TECNOINOX Srl reserves the right to make changes at any time without prior notice.
tecnoinox.it

INSTALLATION DIAGRAMS

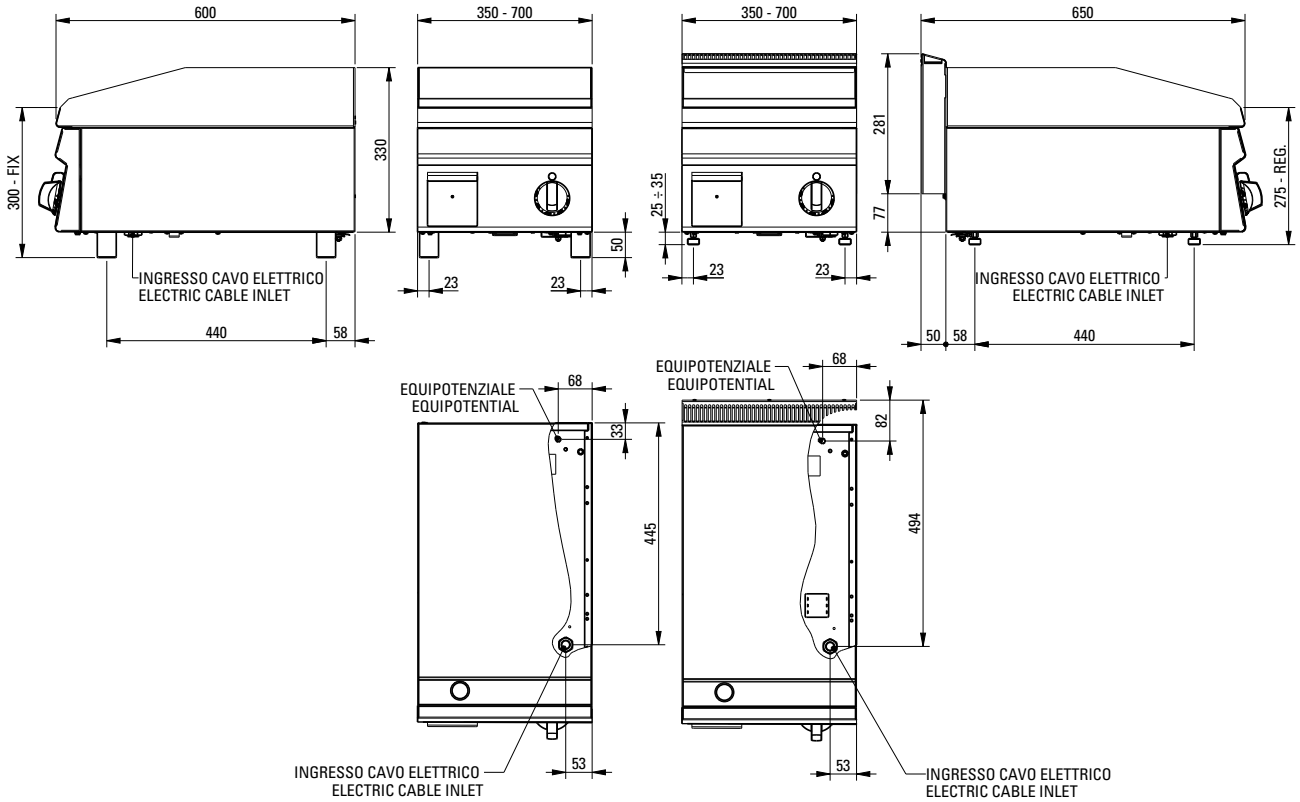

Data stampa | Print date	Codice | Code	Foglio | Sheet	Modelli | Models
16.04.14	5415.679.00	1	FT_E/6/_ - FT_E/_

TECNOINOX Srl reserves the right to make changes at any time without prior notice.
tecnoinox.it