116013

PCC70E/6/0

Glass ceramic electric boiling top with 4 heating zones (top version)

- Glass ceramic electric boiling top (70 cm top version) with 4 independent cooking zones.
- Glass ceramic cook top (6 mm thick) hermetically sealed to the top for maximum hygiene and ease of cleaning.
- Ultra-rapid infrared heating elements with a power of 1.8 kW in a single circuit and 2.5 kW in a dual circuit.
- Energy regulator 0-6-infinite.
- Heating commands and separated controls for each area by means of a thermostat.
- Lights warning when the heating areas are active.
- Heat warning lamps on the glass to enhance operator safety.
- Plastic feet (H=51 mm).
- Stainless steel control panel and side panels.
- Module coupling system with external side joints.
- Glass ceramic electric cooker (70 cm) with 4 independent cooking zones on an electric convection oven.
- Ultra-rapid infrared heating elements with a power of 1.8 kW in a single circuit and 2.5 kW in a dual circuit for each independent area.
- Separated heating commands and controls per plate.
- Warning lamps on the glass to enhance operator safety by signalling residual heat.
- AISI 304 stainless steel height-adjustable feet (133/195 mm).

>> ELECTRIC CONVECTION OVEN
>> Enamelled cooking chamber (45x39.5x33.5 cm).
>> Oven door with 2 tempered glass panes. Heat-reflecting inner glass.
>> Removable silicone gasket.
>> Heating via fan with heating element.
>> Thermostatic control 0-275°C.
>> 4 trays 440x365 mm.
>> Timer 0-50 minutes.
>> 1 grid and 1 tray included.

TECNOINOX Srl reserves the right to make changes at any time without prior notice.
tecnoinox.it

TECHNICAL DATA

TOTAL POWER	8,6 kW	ELECTRIC POWER	8,6 kW
FREQUENCY	50/60 Hz	VOLTAGE	400 3N ~ V
BOILING TOP POWER	8,6 kW	COOKING ZONE POWER	2X1,8 + 2X2,5 n°- kW
2-ZONE HEATING ELEMENTS	n° 2	NUMBER OF COOKING ZONES	n° 4
HEATING ZONES	n° 4	IPX RATING	4
WIDTH	70 cm	DEPTH	60 cm
HEIGHT	30 cm	PACKAGE WIDTH	76,0 cm
PACKAGE DEPTH	71,0 cm	PACKAGE HEIGHT	53,0 cm
NET WEIGHT	18,5000 kg	GROSS WEIGHT	26,0000 kg
VOLUME	0,29 m³		

ACCESSORIES

120585	JOINT FOR TECNO60, TECNO65
120666	TECNO60 SPLASHBACK L=700MM

TECNOINOX Srl reserves the right to make changes at any time without prior notice.
tecnoinox.it

INSTALLATION DIAGRAMS

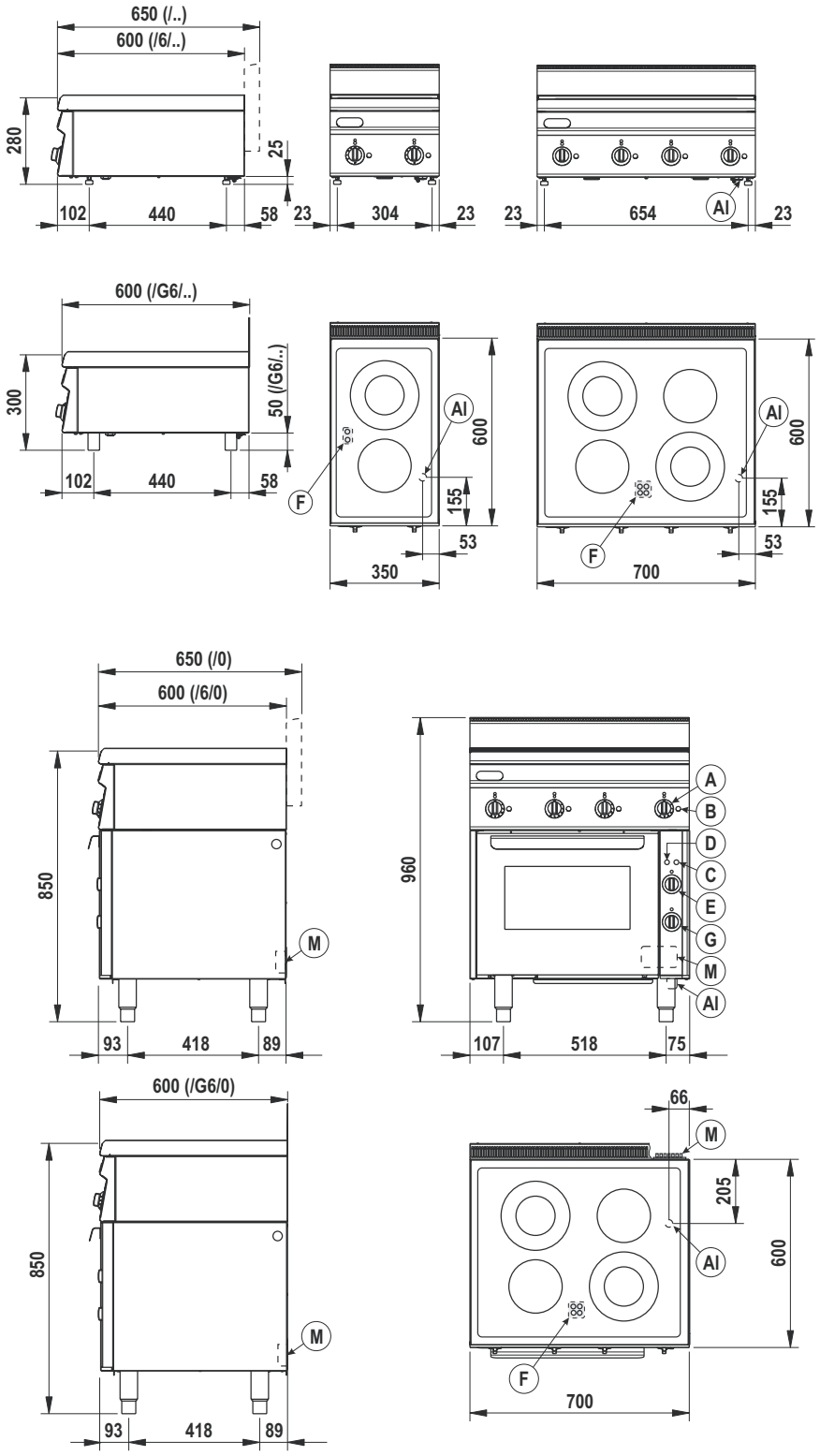

Fig.1 | Abb.1 | рис.1 - 5415.673.00

TECNOINOX Srl reserves the right to make changes at any time without prior notice.
tecnoinox.it