113022

FTC35G/G6

Gas griddle with chrome-plated, smooth plate (top version)

- Gas griddle (35 cm top version) with a mirror-polished, brushed, chrome-plated, smooth plate top recommended for cooking delicate foods like fish and vegetables.
- Horizontal cooking plate (12 cm thick).
- The non-stick cooking plate ensures quick and effortless cleaning, prevents oxidation, and eliminates any flavour transfer.
- Heating through 1 steel burner (4 kW).
- Operating thermostatic valve with temperature ranging between 150°C and 300°C.
- Safety thermostat that triggers below 350°C.
- Scraper included.
- Chrome-plated griddles comply with EU Regulation 1935/2004 concerning food contact materials and articles which are intended to come into contact with food.
- Stainless steel control panel and side panels.
- Module coupling system with external side joints.
- Appliances intended for direct cooking.
- Cooking plate hermetically sealed to the worktop.
- Ignition through a piezoelectric device.
- Pilot burner and safety thermocouple.
- Grooving with a cap and removable drawer for collecting grease and liquids.
- Removable splashback on 3 sides integrated into the worktop.
- Plastic feet (H=51 mm).
- The gas appliances are CE-certified by German body DVGW and have passed the most stringent safety tests.
- The equipment is delivered in accordance with the customer's specifications in terms of installed nozzles, even during testing. G20 natural gas is the standard configuration. In addition, spare nozzles are included should conversion be necessary on site.

TECNOINOX Srl reserves the right to make changes at any time without prior notice.
tecnoinox.it

TECHNICAL DATA

TOTAL POWER	4 kW	GAS POWER	4 kW
TEMPERATURE RANGE	60÷300 °C	NATURAL GAS CONSUMPTION	0,42 m³/h
COOKING SURFACE	34,6X52 cm	PLATE TYPE	CHROME-PLATED - SMOOTH
HEATING ZONES	n° 1	CE GAS CERTIFICATE NUMBER	CE-0085BO0093
GAS CONNECTION DIAMETER	1/2"G EN10226-1	FOOT HEIGHT	51 mm
IPX RATING	4	WIDTH	35 cm
DEPTH	60 cm	HEIGHT	30 cm
PACKAGE WIDTH	71,0 cm	PACKAGE DEPTH	42 cm
PACKAGE HEIGHT	54 cm	NET WEIGHT	31 kg
GROSS WEIGHT	36 kg	VOLUME	0,16 m³

ACCESSORIES

120591	PAIR OF JOINTS FOR GAS GRIDDLES
120595	GRIDDLE-CLEANING SCRAPER
120597	SCRAPER - REPLACEMENT BLADE KIT (10 PIECES)

TECNOINOX Srl reserves the right to make changes at any time without prior notice.
tecnoinox.it

INSTALLATION DIAGRAMS

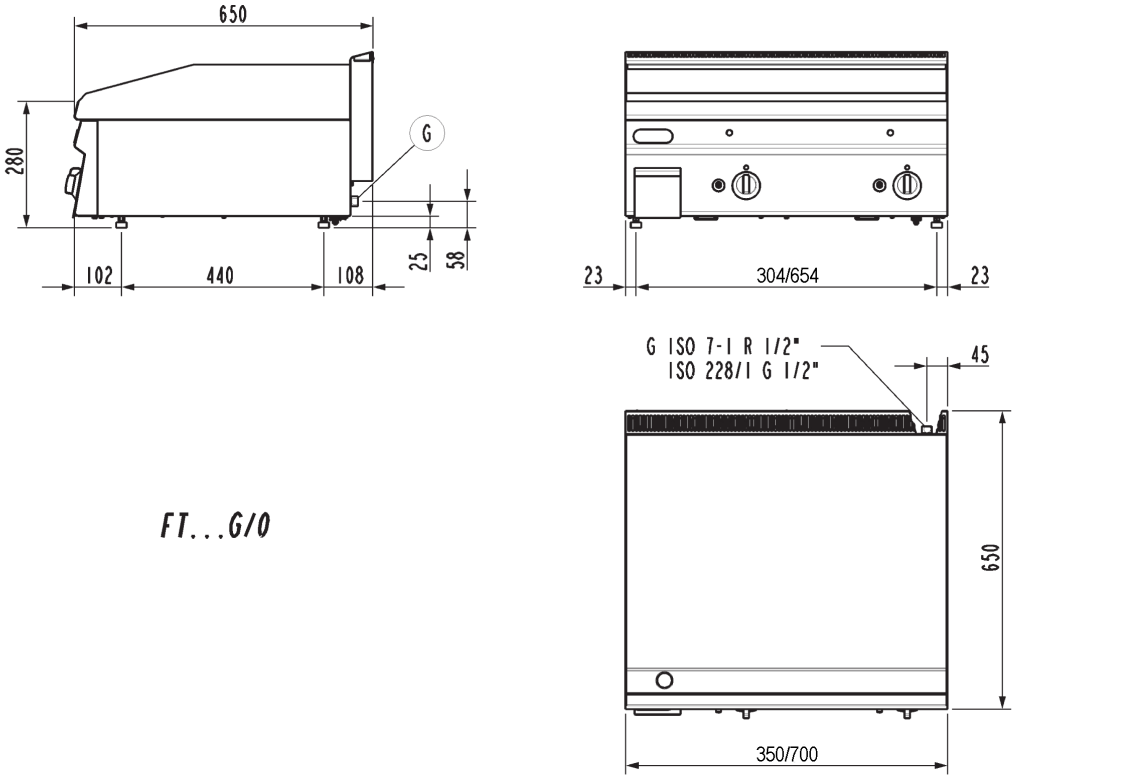

FT...G/0

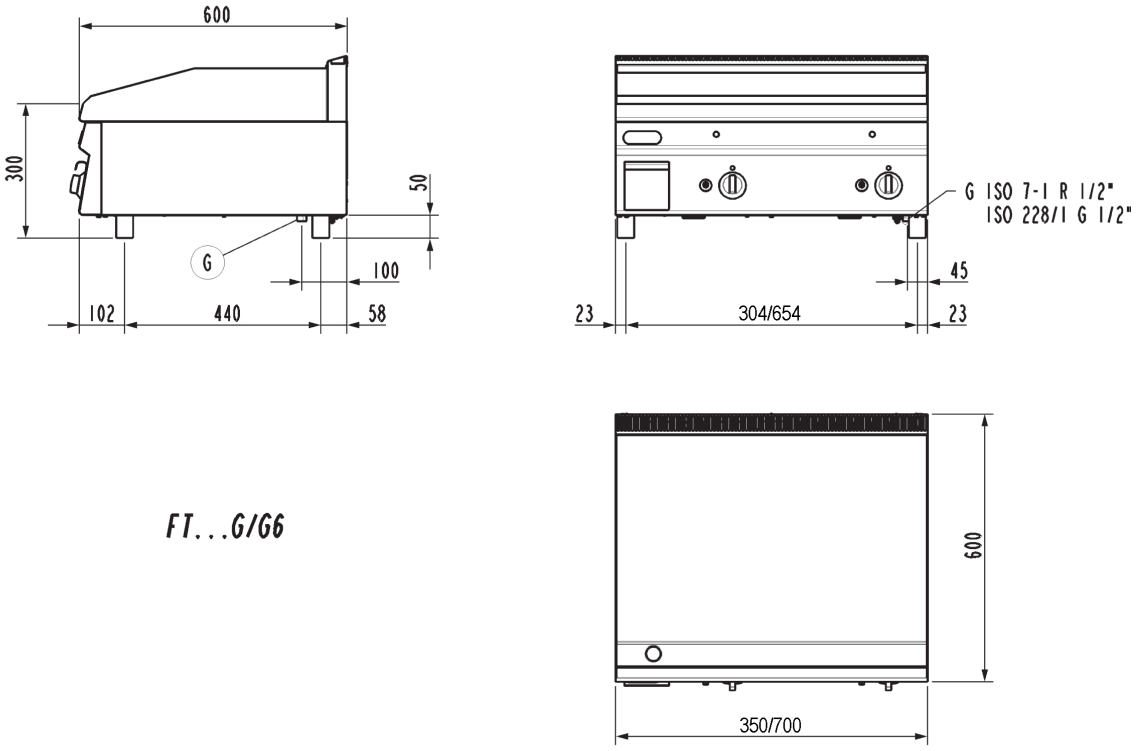

FT...G/G6

G (½"ISO228-1 – G ½" EN 10226-1) = Attacco gas | Gas inlet connection | Gasanschluss | Подсоединение газ | Arrivée gaz | Entrada gas.

Fig.1 | Abb.1 | рис.1 - 5415.680.00

TECNOINOX Srl reserves the right to make changes at any time without prior notice.
tecnoinox.it